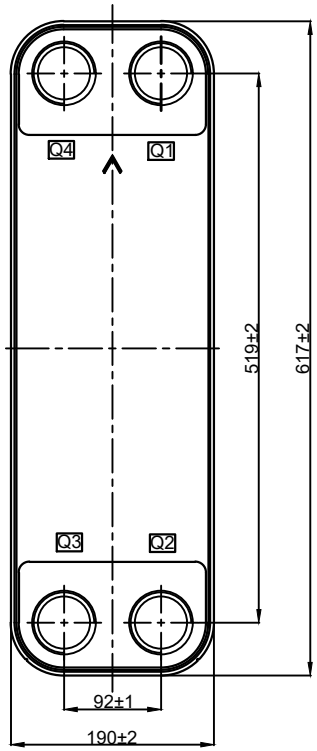

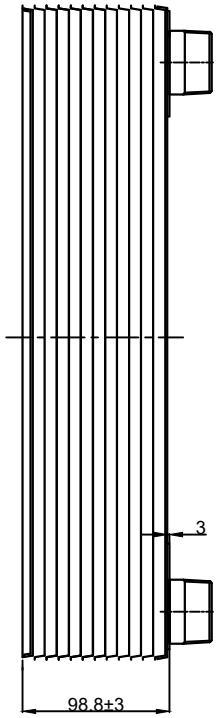

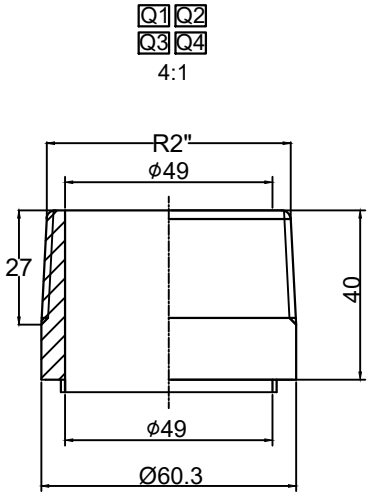

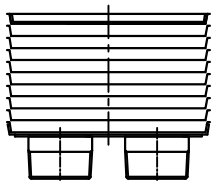

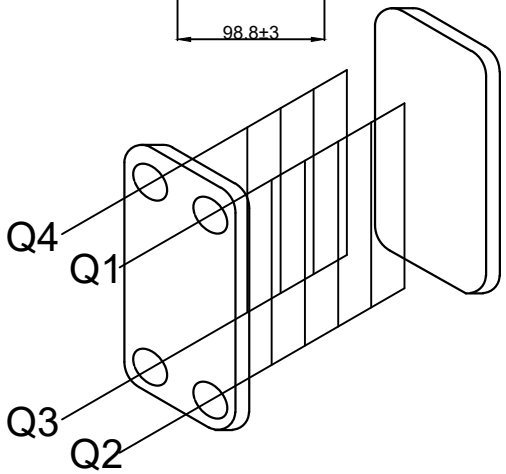

Note:
This product is designed, produced and inspected in accordance with the standard of "Plate Heat Exchanger for Refrigeration JB8701"

Design pressuer(MPa)	3.0
Testing pressuer(MPa)	4.5
Design Temperature(℃)	-196～+200℃
Volume(L)	Q1Q2side:3.360 ;Q3Q4side:3.150
Heat transfer area(㎡)	3.300
Weight(kg)	17.83
Customer Part No.	
Label Code	

Model	Total plates	Q1Q2Q3Q4(R2)
(ATS-110-32-3.0-H(MB95-32H	32	

	SIGNATURE	DATE	MATERIAL	SIZE	SCALE	View
DESIGNER	XLL	2025-09-25	*SUS 316L*	A4	1:1	
CHECKER						
AUDITOR			(Title) Brazed Plate Heat Exchanger			
TECHNICS						
TANDARDIZATION			(Drawing No.) T001268-015			
APPROVE						
(Model)	ATS-110		PAGE 1 PAGES 1			