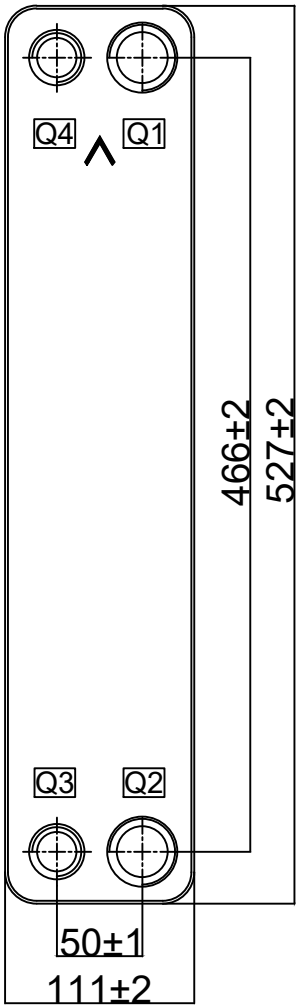

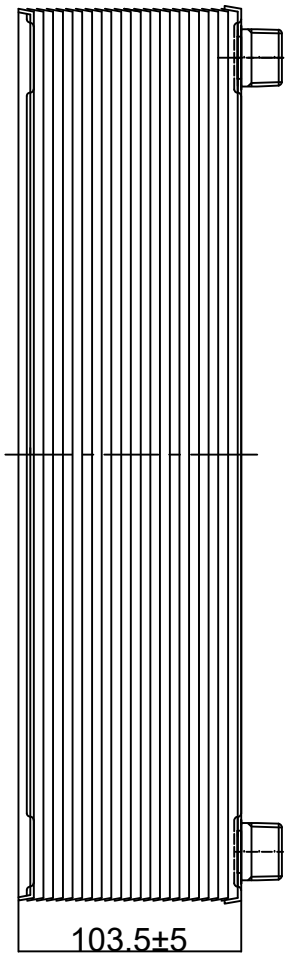

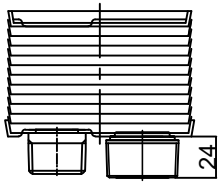

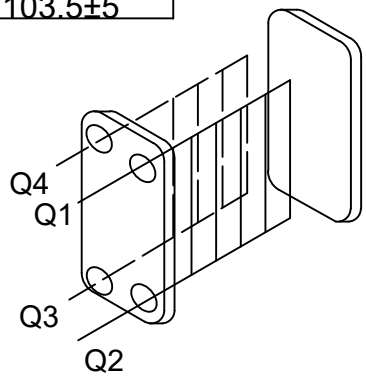

(Q1Q2Q3Q4(R1

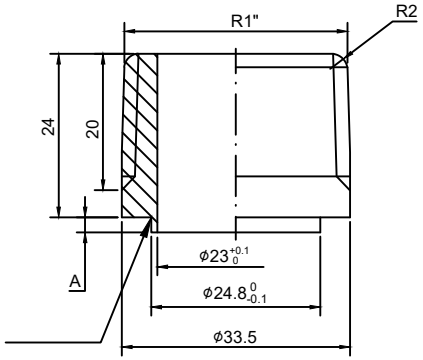

Design pressuer(MPa)	3.0
Testing pressuer(MPa)	4.5
Design Temperature(℃)	-196～+200℃
Volume(L)	Q1Q2side:1.900 ;Q3Q4side:1.805
Heat transfer area(m²)	1.976
Weight(kg)	10.5
Customer Part No.	
Label Code	

Model	Total plates	Q1Q2(R11/4) Q3Q4(R1)
(ATS-052-40-3.0-H(MB60-40H	40	

	SIGNATURE	DATE	MATERIAL	SIZE	SCALE	View
DESIGNER	XLL	2025-07-28	*SUS 316L*	A4	1:1	
CHECKER						
AUDITOR			(Title) Brazed Plate Heat Exchanger			
TECHNICS						
TANDARDIZATION			(Drawing No.) T001268-002			
APPROVE						
(Model)	ATS-052		PAGE 1 PAGES 1			